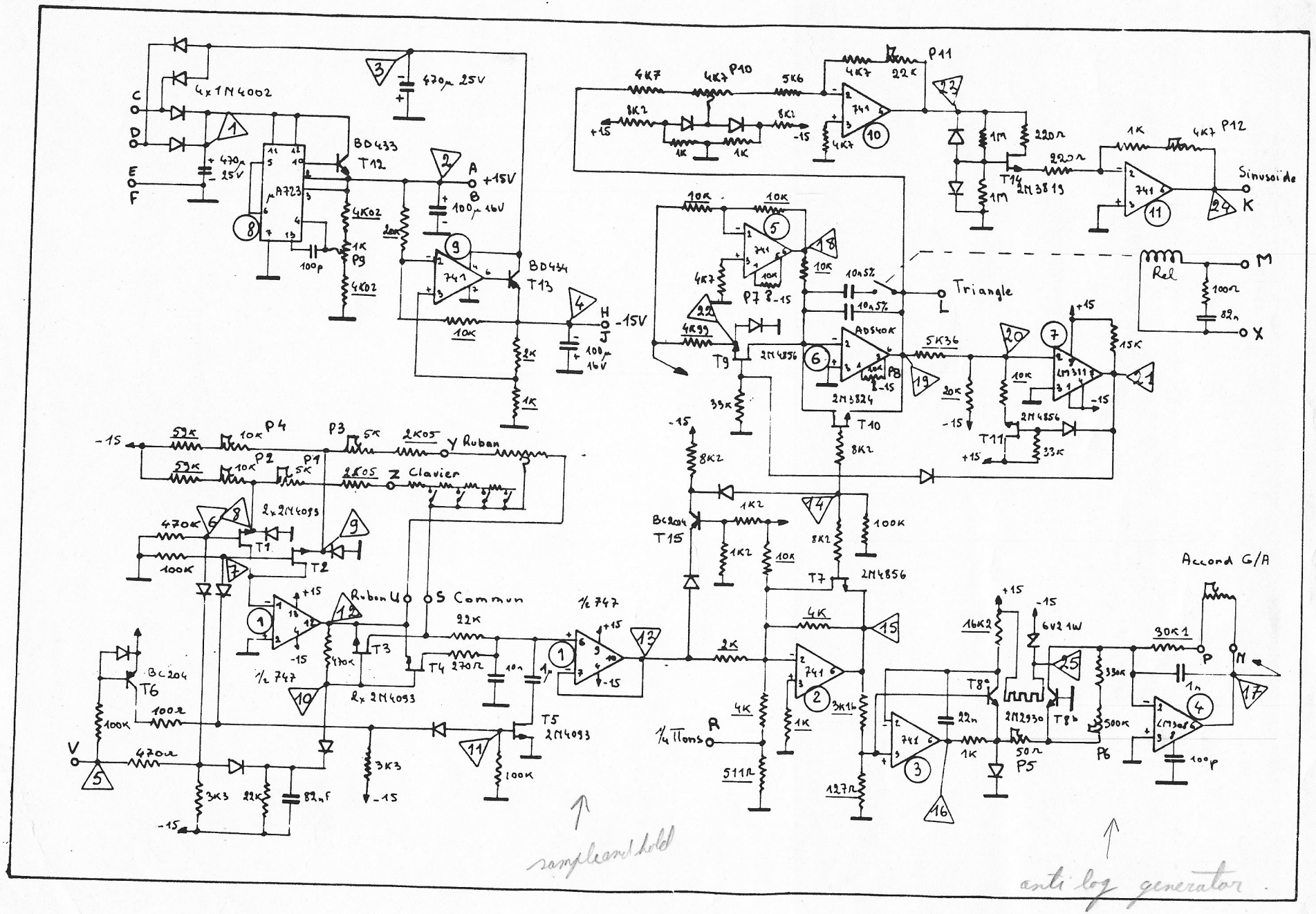

4x1N4002
470µ 25V
BD433
T12
µA723
4K02
1K
P9
100p
BD434
T13
10K
2K
1K
100µ 16V
+15V
-15V
4K7
P10
5K6
8K2
1K
P11
22K
741
1M
220Ω
T14
2N3819
P12
Sinusoïde
K
Triangle
L
10n5%
P7
4K99
T9
2N4856
AD540K
P8
2N3824
T10
5K36
LM311
15K
Rel
M
X
33K
T11
P4
P3
P2
P1
59K
2K05
Y Ruban
Z Clavier
2x2N4093
T1
T2
470K
100K
Ruban
S Commun
1/2 747
T3
T4
270Ω
22K
10n
1µ
T5
2N4093
BC204
T6
100Ω
470Ω
3K3
82nF
V
BC204
T15
1K2
T7
2N4856
4K
2K
3K16
1/4 Ttons
R
511Ω
127Ω
16K2
6V2 1W
T8a
T8b
2N2930
22n
50Ω
P5
P6
330K
500K
30K1
1n
LM308
100p
Accord G/A
P
N
sample and hold
anti log generator